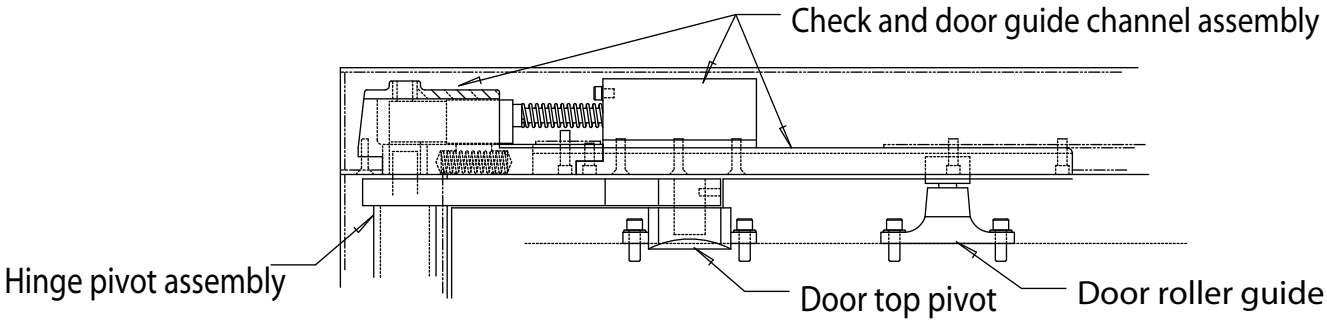

Partial elevation detail "A" showing check and guide channel assembly along with door in the closed position

(face of door and frame omitted for clarity of hardware)

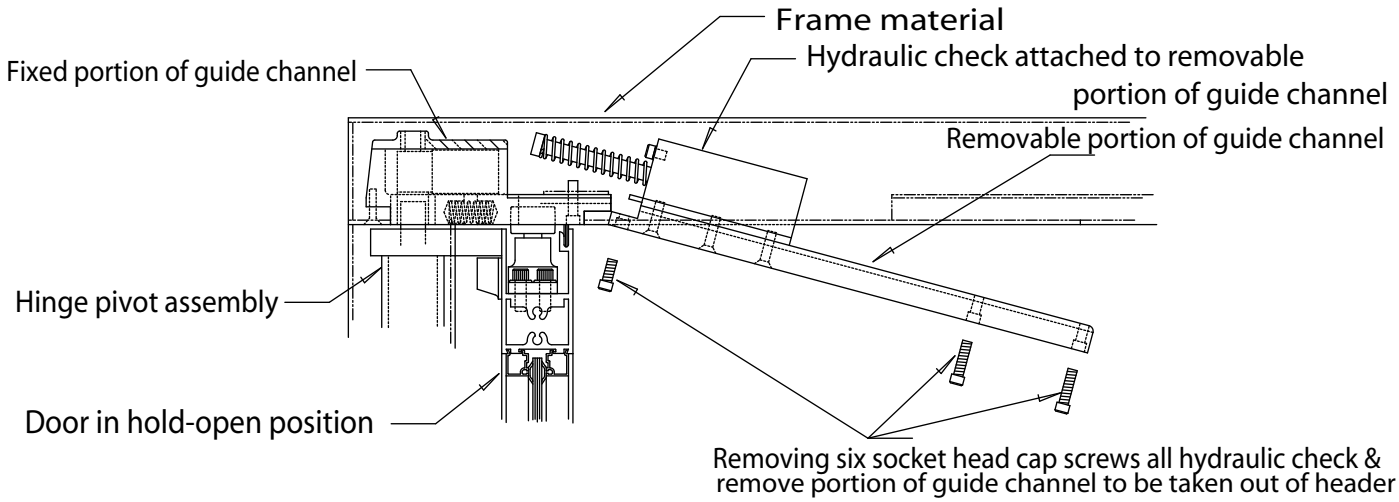

Partial elevation detail "B" showing check and removable portion of guide channel being removed from header while door is in hold-open position

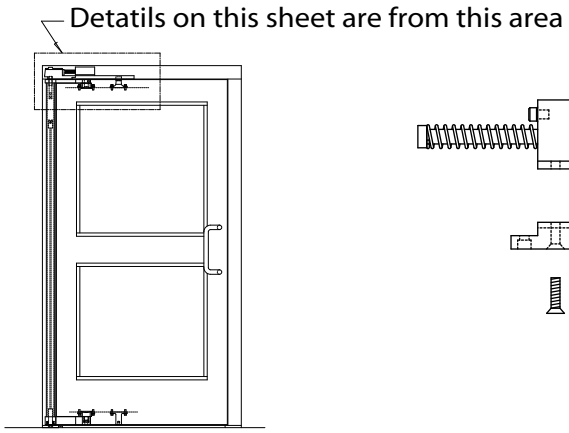

Door and frame elevation

(face of frame omitted for clarity of hardware)

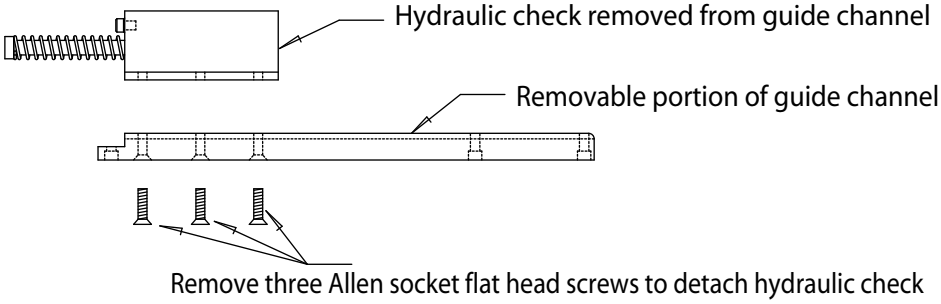

Detail "C" showing check seperated from removable portion of guide channel for replacement